LUMENOPTIX™
Innovative Design for the Built Environment™

203 PROGRESS DRIVE, MONTGOMERYVILLE PA 18936

CLS

Installation Guide

LED, Commercial Wall Cylinder

Important Safety Instructions

CLS WARNINGS:

Read and follow these warnings and instructions before installing or maintaining this product.

- **WARNING –** Risk of fire or electric shock. To avoid electrical shock or fixture damage turn off power at the electrical panel prior to installation or maintenance.
- **WARNING –** Risk of fire or electric shock. Luminaire installation requires knowledge of luminaire electrical systems. If not qualified, do not attempt installation. Contact a qualified electrician.
- **WARNING –** To prevent wiring damage or abrasion, do not expose wiring to edges of sheet metal or other sharp objects.
- Warranty is void in case of unauthorized modifications and/or improper use. Do not make or alter any open holes in an enclosure of wiring or electrical components during installation.
- This product must be installed by a person familiar with the construction and operation of the product and the hazards involved, in accordance with the applicable NEC code.
- Do not install damaged product.
- Save these instructions and refer to them when additions, changes or services to the fixture or system are made.

Technical Data/Specs

- **1000 Lmn Module** - **Input:** 120-277V 50/60Hz - 0.19A for 120V, 0.08A for 277V
  Output: 200-700mA 56V
- **1500 Lmn Module** - **Input:** 120-277V 50/60Hz - 0.38A for 120V, 0.16A for 277V
  Output: 200-700mA 56V
- **2000 Lmn Module** - **Input:** 120-277V 50/60Hz - 0.38A for 120V, 0.16A for 277V
  Output: 200-700mA 56V
- **3000 Lmn Module** - **Input:** 120V 60Hz - 0.5A
  Output: 0.3-1.0A
  Input: 277V 60Hz - 0.2A
  Output: 0.2A
  Input: 120-277V 60Hz - 0.3-1.0A
  Output: 0.3-1.0A
- **4000 Lmn Module** - **Input:** 120-277V 50/60Hz - 0.38A for 120V, 0.16A for 277V
  Output: 200-700mA 56V

Tools Needed

- 5/64” Ball Point HEX “L” Key (Provided)

Part Numbers

CLS1-8PW
CLS1-10PW
CLS1-12PW

Installation Guide LED, Commercial Wall Cylinder

TURN OFF POWER PRIOR TO ANY WORK ON A SYSTEM OR PRODUCT. ALL WIRING MUST BE IN ACCORDANCE WITH NATIONAL AND LOCAL CODES.

1. Attach wall plate to appropriate J-Box and tighten screws (provided by others) securely (see figures **1** and **1a**).
2. Angle cylinder and insert pin into slot on the wall plate.
3. Make wiring connections including ground wire.
4. Turn and close cylinder to the wall plate being sure not to crimp the wires.
5. Tighten set screws on top and bottom of wall mounting arm using Hex "L" Key provided.
6. Installation complete. Turn power on at circuit breaker or panel.

Scan this QR code to watch a brief installation video

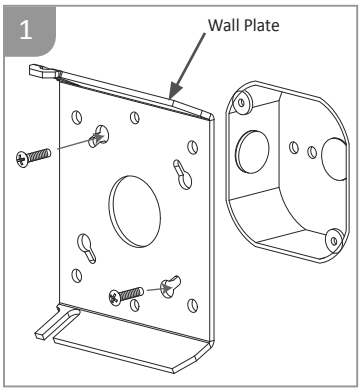

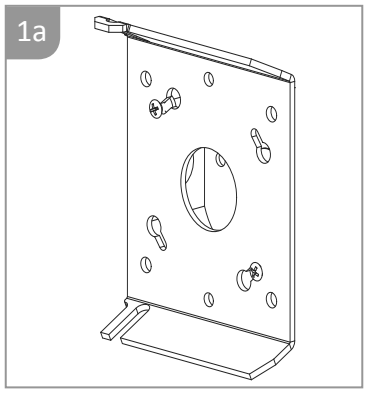

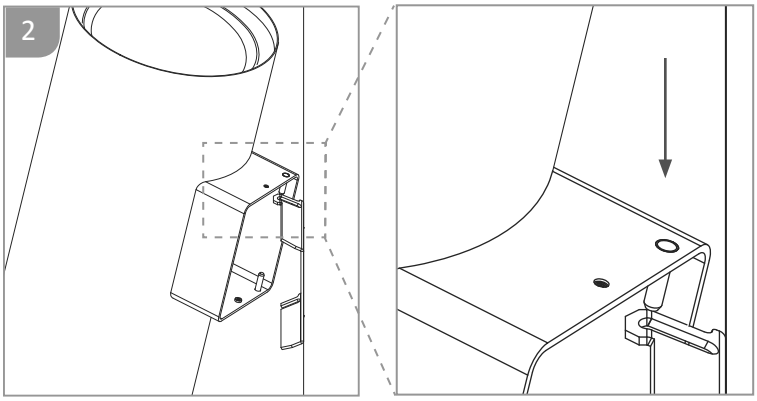

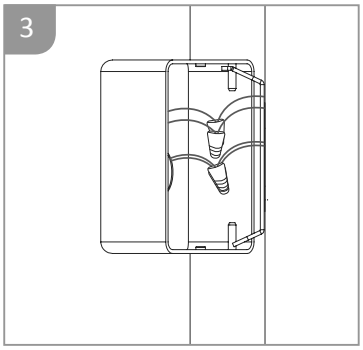

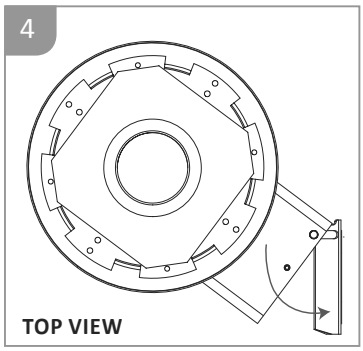

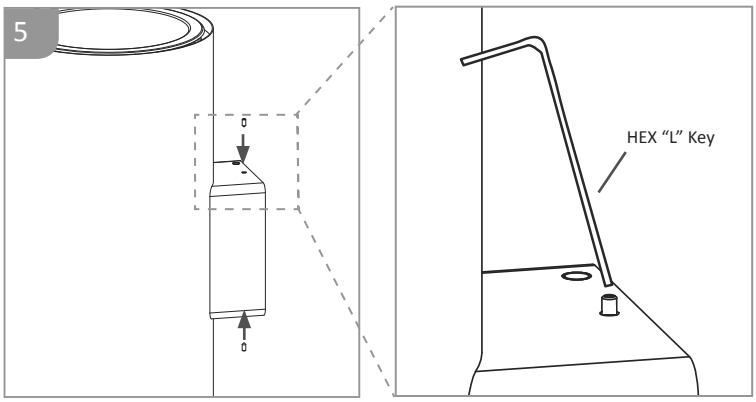

LUMENOPTIX™
Innovative Design for the Built Environment™

Call 1.800.671.6799 EST,
Outside of the U.S. 215.671.2029
www.lumenoptix.com ©2013 LumenOptix™, LLC 9.24.13

C US

MADE IN USA OF U.S. AND IMPORTED PARTS. ARRA AND BUY AMERICAN ACT COMPLIANT

Installation Guide LED, Commercial Wall Cylinder | Bolster Plate Option

TURN OFF POWER PRIOR TO ANY WORK ON A SYSTEM OR PRODUCT. ALL WIRING MUST BE IN ACCORDANCE WITH NATIONAL AND LOCAL CODES.

1. Attach bolster plate to appropriate J-Box and tighten screws (provided by others) securely (see figure **1**).
2. Attach wall plate to bolster plate.
3. Secure with nuts (see figures **3** and **3a**).
4. Angle cylinder and insert pin into slot on the wall plate.
5. Make wiring connections (including ground wire) and push wires and wiring connections into J-box, being careful not to crimp the wires.
   a. Turn and close cylinder to the wall plate being sure not to crimp the wires (see figures **5** and **5a**).
6. Tighten set screws on top and bottom of wall mounting arm using Hex "L" Key provided.
   a. Secure screws on top of and on the bottom of the bolster plate.
7. Installation complete. Turn power on at circuit breaker or panel.

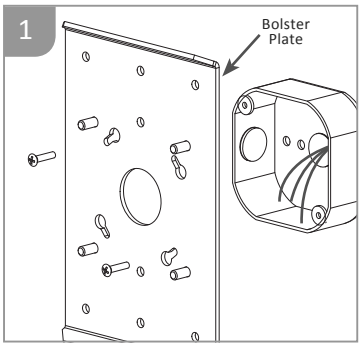

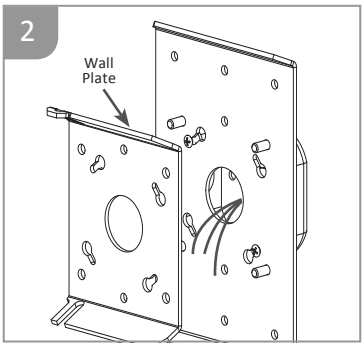

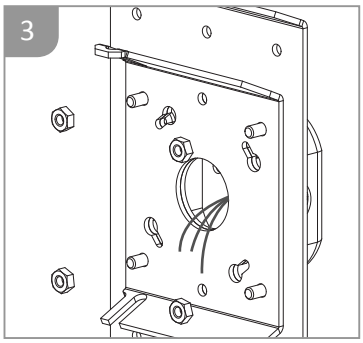

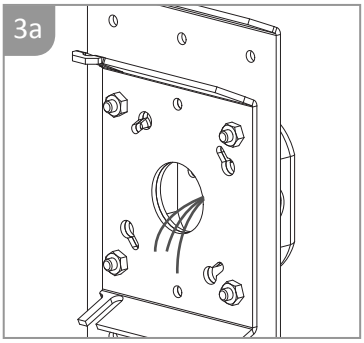

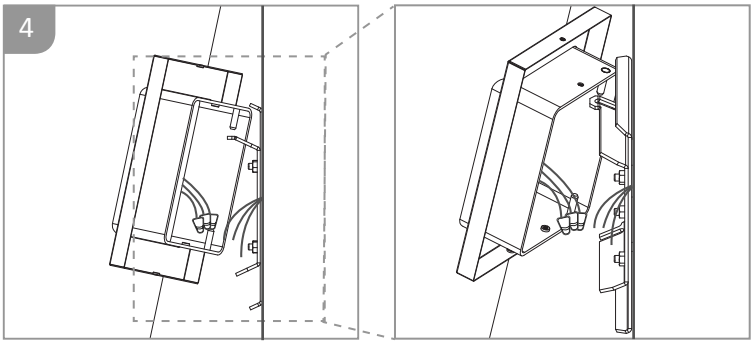

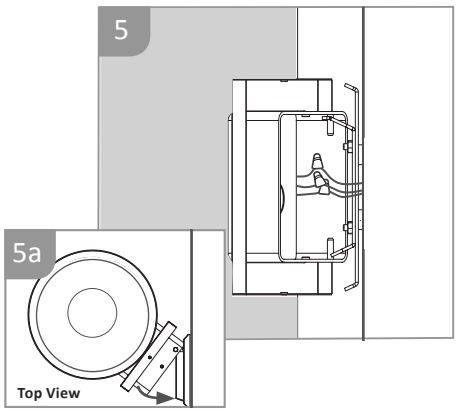

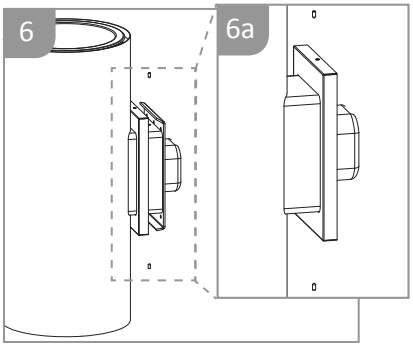

Scan this QR code to watch a brief installation video

C US

LUMENOPTIX™
Innovative Design for the Built Environment™

Call 1.800.671.6799 EST,
Outside of the U.S. 215.671.2029
www.lumenoptix.com ©2014 LumenOptix™, LLC 3.25.14

MADE IN USA
OF U.S. AND IMPORTED PARTS
ARRA AND BUY AMERICAN ACT COMPLIANT